INNOLUX 群創光電

PRODUCT SPECIFICATION

Doc. Number:

☐Tentative Specification

☐ Preliminary Specification

■Approval Specification

MODEL NO.: AT102TN03
SUFFIX: V.8

Customer:

APPROVED BY **SIGNATURE**

Name / Title

Note :

Only for reference

Please return 1 copy for your confirmation with your signature and comments.

Approved By	Checked By	Prepared By
Joko.Wang	Menghsan.Lu	KC.Chang
2024/02/05	2024/02/05	2024/02/05

The copyright belongs to InnoLux. Any unauthorized use is prohibited.

InnoLux copyright 2004
All rights reserved,
Copying forbidden.

Record of Revision

Version	Revise Date	Page	Content
Pre-Spec. 01	2009/03/26		Initial Release
Final-Spec.01	2009/08/17		The First Final Specification
		1	Add LCM weight
Final-Spec.02	2009/09/17	6	Modify Power voltage
		7	Modify Power voltage
		7	Modify Input signal voltage
		8	Modify Current for Driver
Final-Spec.03	2009/12/11	5	Modify The Color Of Light bar Wire
Final-Spec.04	2010/01/18	24	Modify Mechanical Drawing
Final-Spec.05	2015/10/09	1	Modify Weight
		21	Reliability Test Items --Remark
		25,26	Modify Mechanical Drawing
Final-Spec.06	2022/03/22	5	Modify Light Bar connector recommended model
		24	Modify Mechanical Drawing
Final-Spec.07	2022/10/14	24	Modify Mechanical Drawing for NJ Site
		25,26	Modify Package Drawing
Final-Spec.08	2024/02/02	24	Modify Mechanical Drawing for NGB Site
		25	Modify Packaging Material Table
		6	Add Ripple voltage
Final-Spec.09	2024/02/05	24	Modify Mechanical Drawing (Fix some error)

The copyright belongs to InnoLux. Any unauthorized use is prohibited.

Contents:

1. General Specifications 1
2. Pin Assignment 2
   2.1. TFT LCD Panel Driving Section 2
   2.2. Backlight Unit Section 5
3. Operation Specifications 6
   3.1. Absolute Maximum Rating 6
      3.1.1 Typical Operation Conditions 7
      3.1.2 Current Consumption 8
      3.1.3 Backlight Driving Conditions 8
   3.2 Power Sequence 9
   3.3 Timing Characteristics 10
      3.3.1 Timing Conditions 10
      3.3.2 Timing Diagram 11
4. Optical Specifications 18
5. Reliability Test Items 22
6. General Precautions 23
   6.1 Safety 23
   6.2 Handling 23
   6.3 Static Electricity 23
   6.4 Storage 23
   6.5 Cleaning 23
7 Mechanical Drawing 24
8 Package Drawing 25
   8.1 Packaging Material Table 25
   8.2 Packaging Quantity 25
   8.3 Packaging Drawing 26

The copyright belongs to InnoLux. Any unauthorized use is prohibited.

1. General Specifications

No.	Item	Specification	Remark
1	LCD size	10.2 inch(Diagonal)	
2	Driver element	a-Si TFT active matrix	
3	Resolution	800 × 3(RGB) × 480	
4	Display mode	Normally white, Transmissive	
5	Dot pitch	0.0925(W) × 0.276(H) mm	
6	Active area	222.0(W) × 132.48(H) mm	
7	Module size	235.0(W) × 145.8(H) ×6.1(D) mm	Note 1
8	Surface treatment	Anti-Glare	
9	Color arrangement	RGB-stripe	
10	Interface	Digital	
11	Backlight power consumption	1.86W(Typ.)	
12	Panel power consumption	0.25W(Typ.)	
13	Weight	309g(Typ.)	

Note 1: Refer to Mechanical Drawing.

The copyright belongs to InnoLux. Any unauthorized use is prohibited.

2. Pin Assignment

2.1. TFT LCD Panel Driving Section

FPC connector is used for the module electronics interface. The recommended model is "AF 730L-A2G1T" manufactured by P-TWO.

Pin No.	Symbol	I/O	Function	Remark
1	POL	I	Polarity selection	
2	STVD	I/O	Vertical start pulse input when U/D= H	Note 1
3	OEV	I	Output enable	
4	CKV	I	Vertical clock	
5	STVU	I/O	Vertical start pulse input when U/D= L	Note 1
6	GND	P	Power ground	
7	EDGSL	I	Select rising edge or rising/falling edge	
8	V_{CC}	P	Power supply for digital circuit	
9	V9	I	Gamma voltage level 9	
10	V_{GL}	P	Gate OFF voltage	
11	V2	I	Gamma voltage level 2	
12	V_{GH}	P	Gate ON voltage	
13	V6	I	Gamma voltage level 6	
14	U/D	I	Up/down selection	Note 1,2
15	V_{COM}	I	Common voltage	
16	GND	P	Power ground	
17	AV_{DD}	P	Power supply for analog circuit	
18	V14	I	Gamma voltage level 14	
19	V11	I	Gamma voltage level 11	
20	V8	I	Gamma voltage level 8	
21	V5	I	Gamma voltage level 5	
22	V3	I	Gamma voltage level 3	
23	GND	P	Power ground	
24	R5	I	Red data(MSB)	
25	R4	I	Red data	
26	R3	I	Red data	
27	R2	I	Red data	
28	R1	I	Red data	
29	R0	I	Red data(LSB)	
30	GND	P	Power ground	

The copyright belongs to InnoLux. Any unauthorized use is prohibited.

31	GND	P	Power ground	
32	G5	I	Green data(MSB)	
33	G4	I	Green data	
34	G3	I	Green data	
35	G2	I	Green data	
36	G1	I	Green data	
37	G0	I	Green data(LSB)	
38	STHL	I/O	Horizontal start pulse input when R/L = L	Note 1
39	REV	P	Control signal are inverted or not	Note 3
40	GND	I	Power ground	
41	DCLK	I	Sample clock	
42	V_{CC}	P	Power supply for digital circuit	
43	STHR	I/O	Horizontal start pulse input when R/L = H	Note 1
44	LD	I	Latches the polarity of outputs and switches the new data to outputs	
45	B5	I	Blue data (MSB)	
46	B4	I	Blue data	
47	B3	I	Blue data	
48	B2	I	Blue data	
49	B1	I	Blue data	
50	B0	I	Blue data (LSB)	
51	R/L	I	Right/ left selection	Note 1,2
52	V1	I	Gamma voltage level 1	
53	V4	I	Gamma voltage level 4	
54	V7	I	Gamma voltage level 7	
55	V10	I	Gamma voltage level 10	
56	V12	I	Gamma voltage level 12	
57	V13	I	Gamma voltage level 13	
58	AV_{DD}	P	Voltage for analog circuit	
59	GND	P	Power ground	
60	V_{COM}	I	Common voltage	

I: input, O: output, P: Power

Note 1: Selection of scanning mode

The copyright belongs to InnoLux. Any unauthorized use is prohibited.

Setting of scan control input		IN/OUT state for start pulse				Scanning direction
U/D	R/L	STVD	STVU	STHR	STHL	
GND	V_{CC}	O	I	I	O	Up to down, left to right
V_{CC}	GND	I	O	O	I	Down to up, right to left
GND	GND	O	I	O	I	Up to down, right to left
V_{CC}	V_{CC}	I	O	I	O	Down to up, left to right

Note 2: Definition of scanning direction.
Refer to the figure as below:

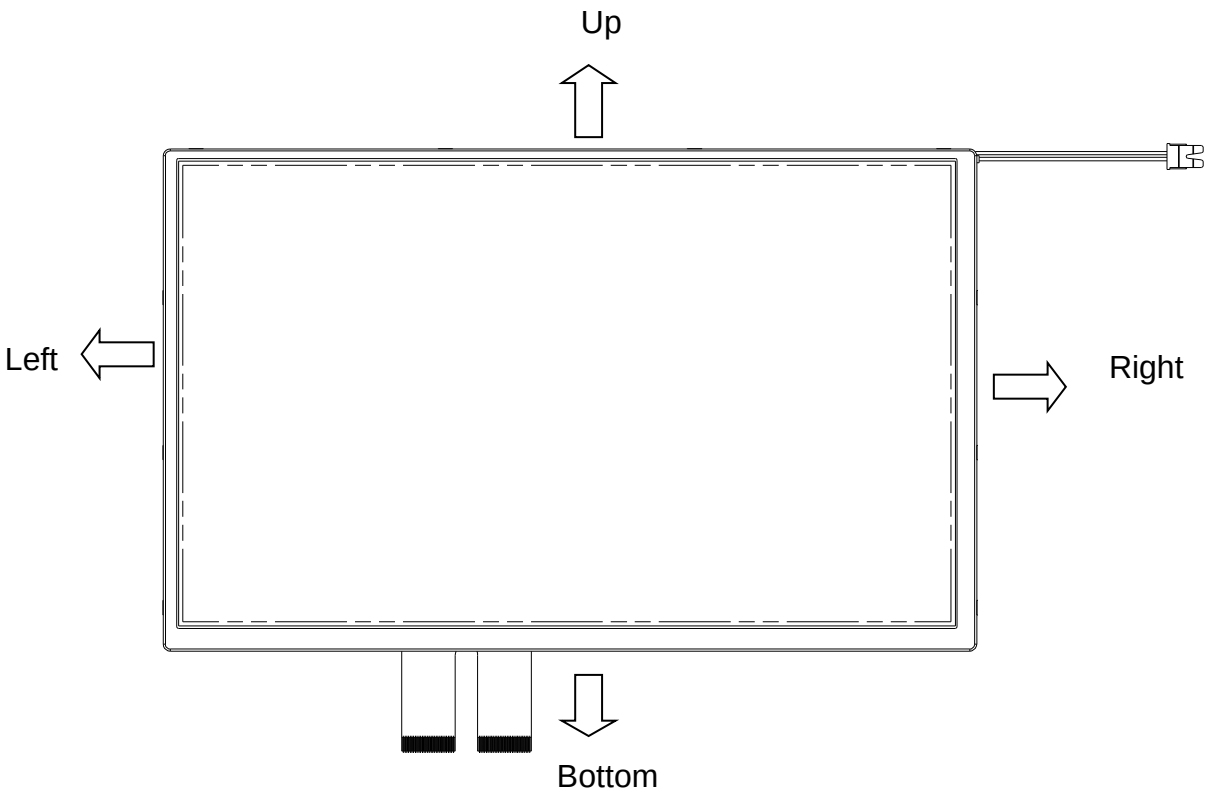

Note 3: When REV=”L” , normally
REV=”H”, these data will be inverted.

The copyright belongs to InnoLux. Any unauthorized use is prohibited.

2.2. Backlight Unit Section

LED Light Bar connector is used for the the integral backlight system. The recommended model is “CP0502S0000-NH” manufactured by CviLux.

Pin No.	Symbol	I/O	Function	Remark
1	V_{LED+}	P	Power for LED backlight anode	Red
2	V_{LED-}	P	Power for LED backlight cathode	White

The copyright belongs to InnoLux. Any unauthorized use is prohibited.

3. Operation Specifications

3.1. Absolute Maximum Rating

(Note 2)

Item	Symbol	Values		Unit	Remark
		Min.	Max.		
Power voltage	V_{CC}	-0.3	5	V	
	AV_{DD}	-0.5	12	V	
	V_{GH}	13	19	V	
	V_{GL}	-12	-2	V	
	V_{GH}-V_{GL}	-	31	V	
Input signal voltage	V1~V7	0.4 AV_{DD}	AV_{DD}-0.1	V	Note 1
	V8~V14	-0.3	0.6AV_{DD}	V	
Operation temperature	T_{OP}	-30	85	℃	
Storage temperature	T_{ST}	-30	85	℃	
LED Reverse Voltage	Vr	-	1.2	V	Each LED Note 3
LED Forward Current	I_f	-	25	mA	Each LED

Note 1: AV_{DD} - 0.1≧V1≧V2≧V3≧V4≧V5≧V6≧V7≧V8≧V9≧V10>V11≧V12≧V13≧V14≧AVSS + 0.1

Note 2: The absolute maximum rating values of the module should not be exceeded. Once exceeded absolute maximum rating values, the characteristics of the module may not be recovered. Even in an extreme condition, may result in module permanently destroyed.

Note 3: Vr conditions: Zener Diode 20mA.

The copyright belongs to InnoLux. Any unauthorized use is prohibited.

3.1.1Typical Operation Conditions

(Note 1)

Item	Symbol	Values			Unit	Remark
		Min.	Typ.	Max.		
Power voltage	V_{CC}	3.0	3.3	3.6	V	
	AV_{DD}	9.0	9.2	9.4	V	
	V_{GH}	15.3	16.0	16.7	V	
	V_{GL}	-7.7	-7.0	-6.3	V	
Input signal voltage	V_{COM}	3.65	3.85	4.05	V	(V1+V14)/2 =4.5V
	V1~V7	0.4 AV_{DD}	-	AV_{DD} -0.1	V	
	V8~V14	0.1	-	0.6 AV_{DD}	V	
Ripple voltage	VRP	--	--	150	mV	Note 2
Input logic high voltage	V_{IH}	0.7V_{CC}	-	V_{CC}	V	
Input logic low voltage	V_{IL}	0	-	0.3V_{CC}	V	

Note 1: Be sure to apply GND, V_{CC}, and V_{GL}, to the LCD first, and then apply V_{GH}.
Note 2: Including signal: VCC、AVDD、VGH、VGL、VCOM.

The copyright belongs to InnoLux. Any unauthorized use is prohibited.

3.1.2 Current Consumption

Item	Symbol	Values			Unit	Remark
		Min.	Typ.	Max.		
Current for Driver	I_{GH}	-	0.3	0.5	mA	V_{GH} =16V
	I_{GL}	-	0.2	1.0	mA	V_{GL} = -7V
	I_{CC}	-	4	10	mA	V_{CC} =3.3V
	IAV_{DD}	-	25	50	mA	AV_{DD} =9.2V

3.1.3 Backlight Driving Conditions

Item	Symbol	Values			Unit	Remark
		Min.	Typ.	Max.		
LED forward voltage	V_L	8.4	9.3	10.5	V	Note 1
LED forward current	I_L	180	200	220	mA	
LED life time	-	20,000	-	-	Hr	Note 2

Note 1: The LED Supply Voltage is defined by the number of LED at Ta=25℃ and I_L =200mA.

Note 2: The “LED life time” is defined as the module brightness decrease to 50% original brightness at Ta=25℃ and I_L =200mA. The LED lifetime could be decreased if operating I_L is larger than 200 mA.

The copyright belongs to InnoLux. Any unauthorized use is prohibited.

3.2 Power Sequence

3.2.1 Power on:

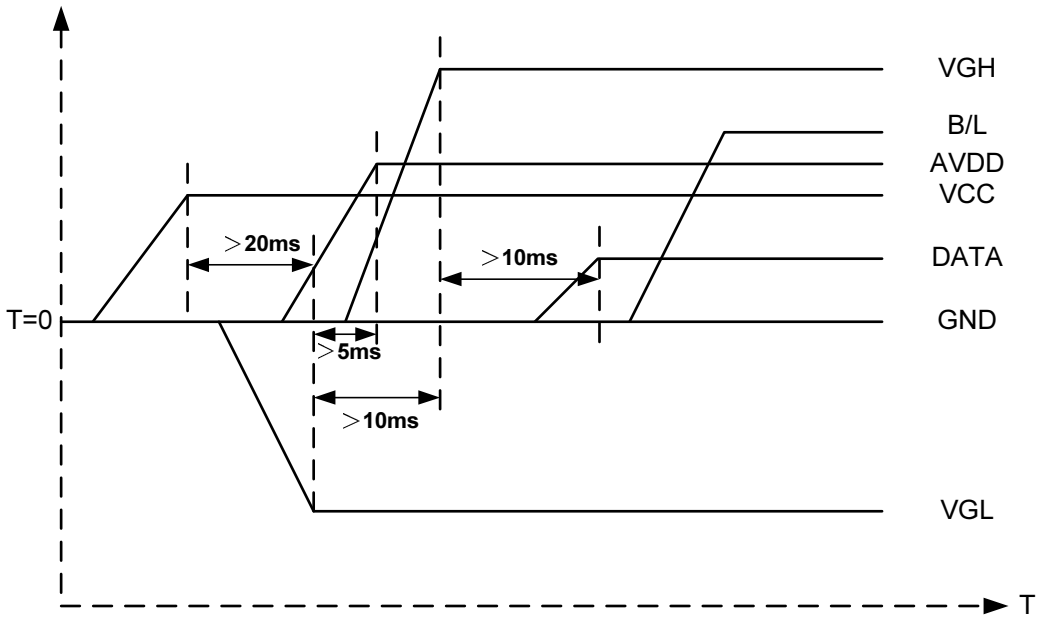

VCC→VGL→AVDD→VGH→Data→B/L

3.2.2 Power off:

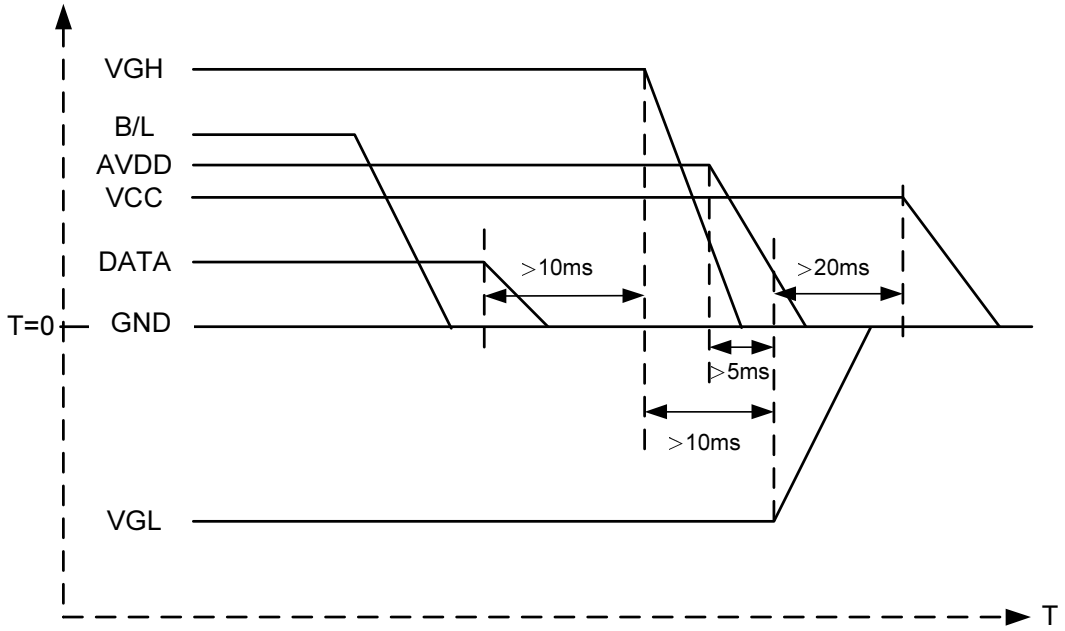

B/L→Data→VGH→AVDD→VGL→VCC

Note: Data includes POL, STVD, OEV, CKV, STVU, EDGSL, STHL, REV, DCLK, , STHR, LD.

The copyright belongs to InnoLux. Any unauthorized use is prohibited.

3.3 Timing Characteristics

3.3.1 Timing Conditions

Item	Symbol	Values			Unit	Remark
		Min.	Typ.	Max.		
DCLK frequency	F_{dclk}	-	40	45	MHz	
DCLK cycle	T_{cph}	22	25	-	ns	
DCLK pulse width	T_{cw}	8	-	-	ns	
Data set-up time	T_{su}	4	-	-	ns	
Data hold time	T_{hd}	2	-	-	ns	
Time that the last data to LD	T_{ld}	1	-	-	Tcph	
Pulse width of LD	T_{wld}	2	-	-	Tcph	
Time that LD to STHL/R	T_{lds}	5	-	-	Tcph	
POL set-up time	T_{psu}	6	-	-	ns	
POL hold time	T_{phd}	6	-	-	ns	
CKV frequency	F_{vclk}	-	-	200	KHz	
CKV rise time	T_{rck}	-	-	100	ns	
CKV falling time	T_{fck}	-	-	100	ns	
CKV pulse width	P_{WCLK}	500	-	-	ns	
Horizontal display timing range	T_{dh}	-	800	-	Tcph	
Horizontal timing range	T_{h}	-	1056	-	Tcph	
STVU/D setup time	T_{suv}	200	-	-	ns	
STVU/D hold time	T_{hdv}	300	-	-	ns	
STVU/D delay time	T_{dt}	-	-	500	ns	
Driver output delay time	T_{do}	-	-	900	ns	
Output rise time	T_{tlh}	-	500	1000	ns	
Output falling time	T_{thl}	-	400	800	ns	
OEV pulse width	T_{wcl}	1	-	-	us	
OEV to Driver output delay time	T_{oe}	-	-	900	ns	
Horizontal lines per field	T_{v}	512	525	610	Line	
Vertical display timing range	T_{vd}	-	480	-	Line	

The copyright belongs to InnoLux. Any unauthorized use is prohibited.

3.3.2 Timing Diagram

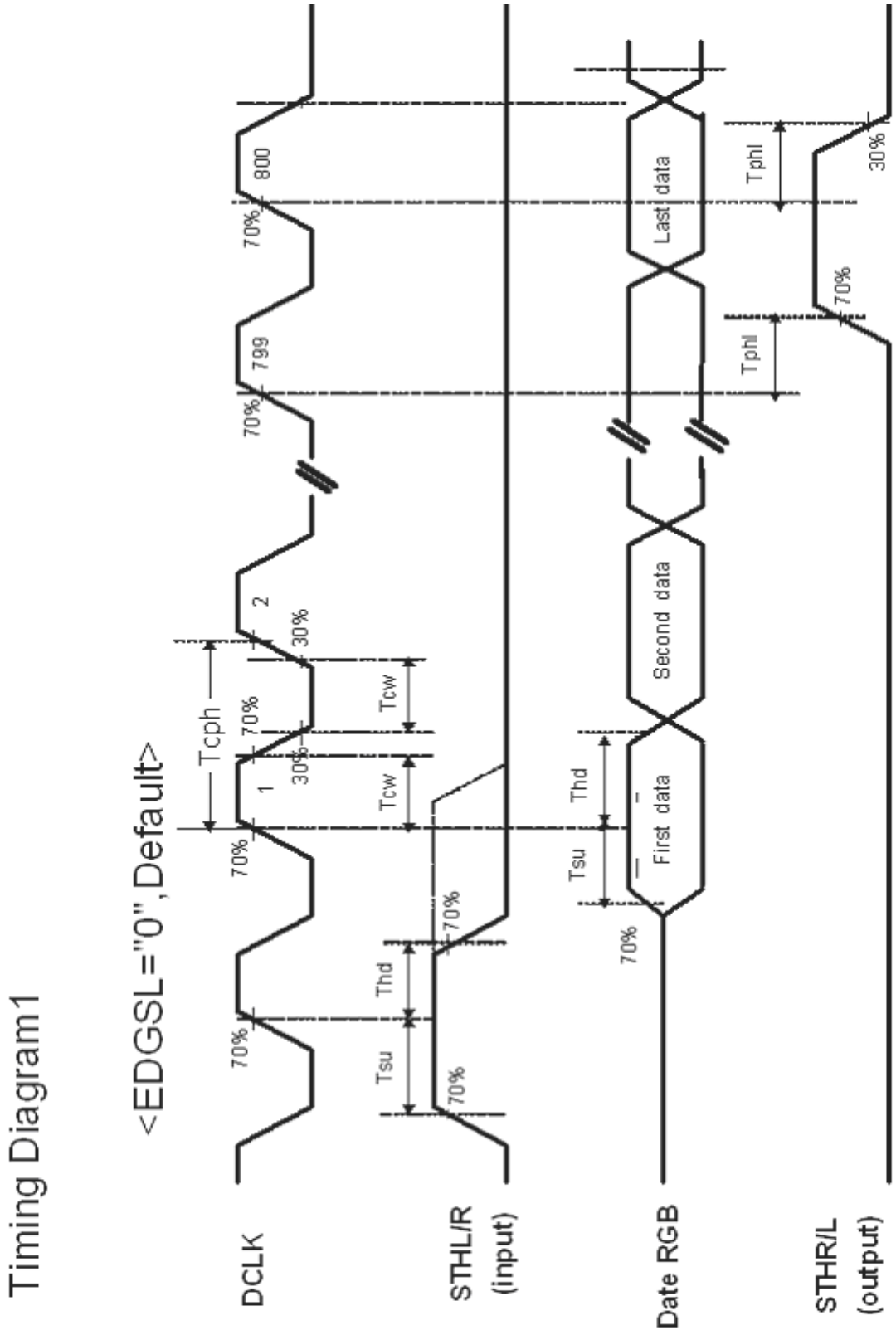

Fig.3-1 operation model 1

The copyright belongs to InnoLux. Any unauthorized use is prohibited.

< EDGSL ="1">

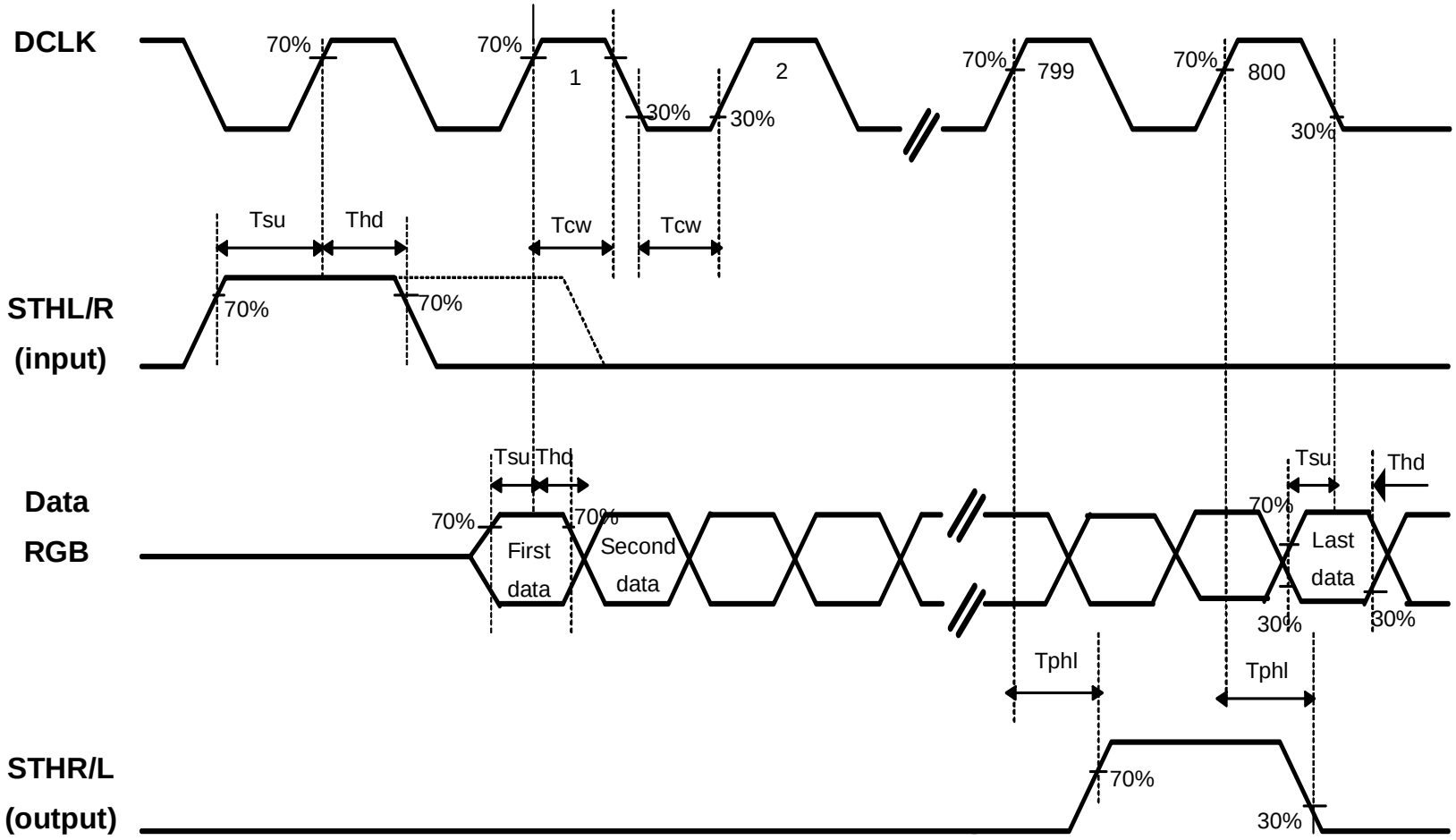

Fig.3-2 operation model 2

The copyright belongs to InnoLux. Any unauthorized use is prohibited.

Timing Diagram 2

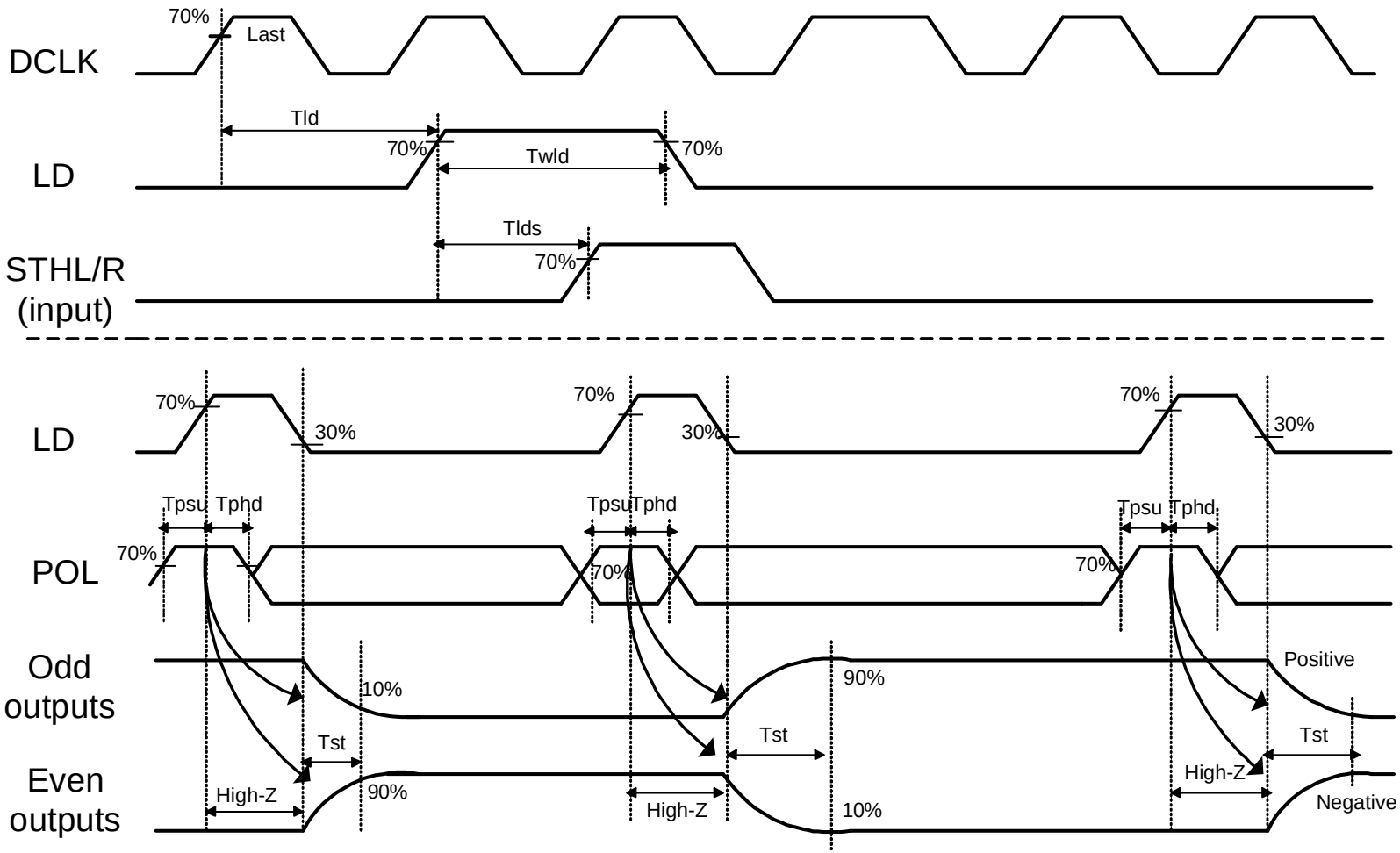

Fig.3-3 Horizontal timing 1

The copyright belongs to InnoLux. Any unauthorized use is prohibited.

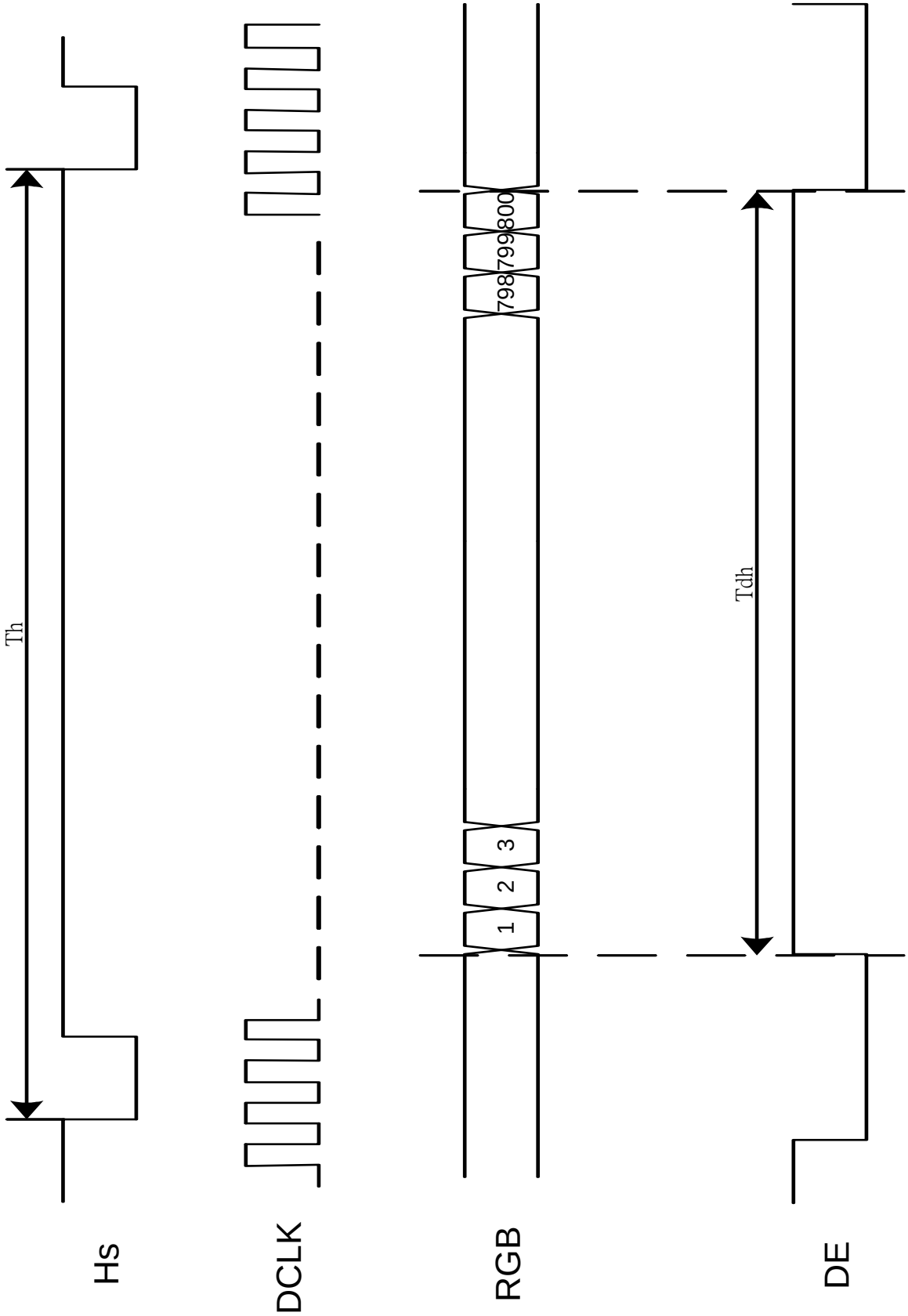

Fig.3-4 Horizontal timing 2

The copyright belongs to InnoLux. Any unauthorized use is prohibited.

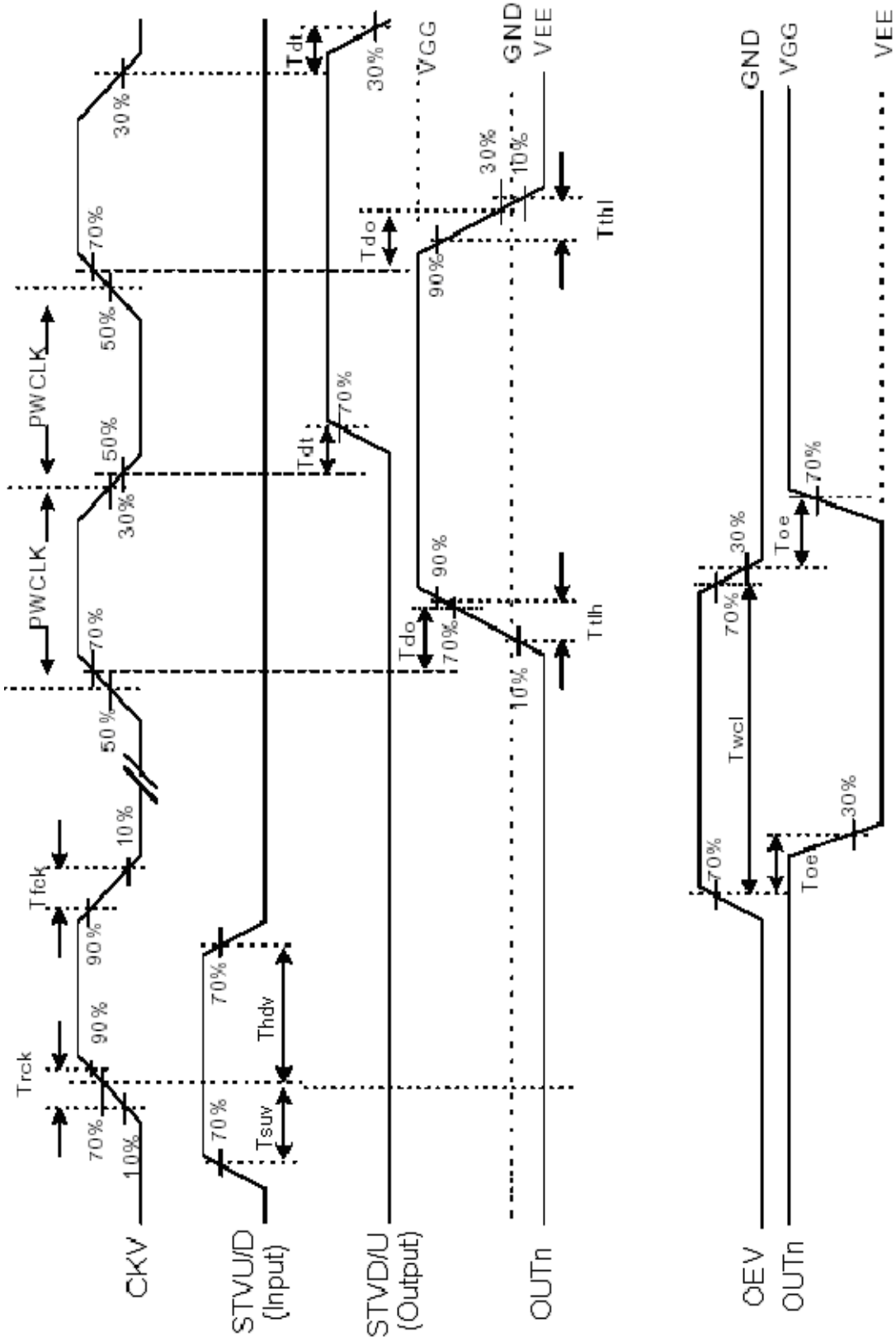

Fig.3-5 Vertical shift clock timing

The copyright belongs to InnoLux. Any unauthorized use is prohibited.

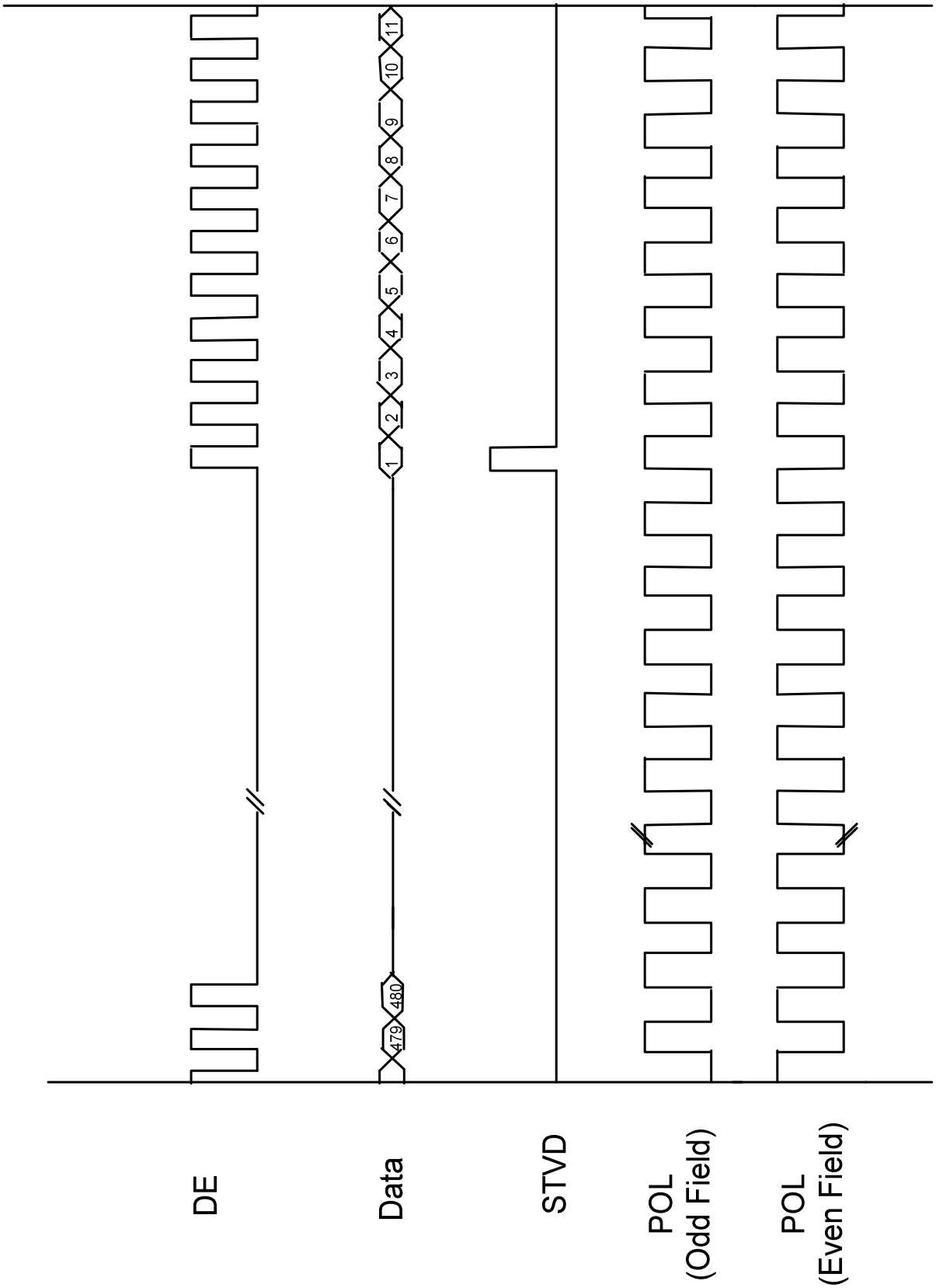

Fig.3-6 Vertical timing (from up to down)

The copyright belongs to InnoLux. Any unauthorized use is prohibited.

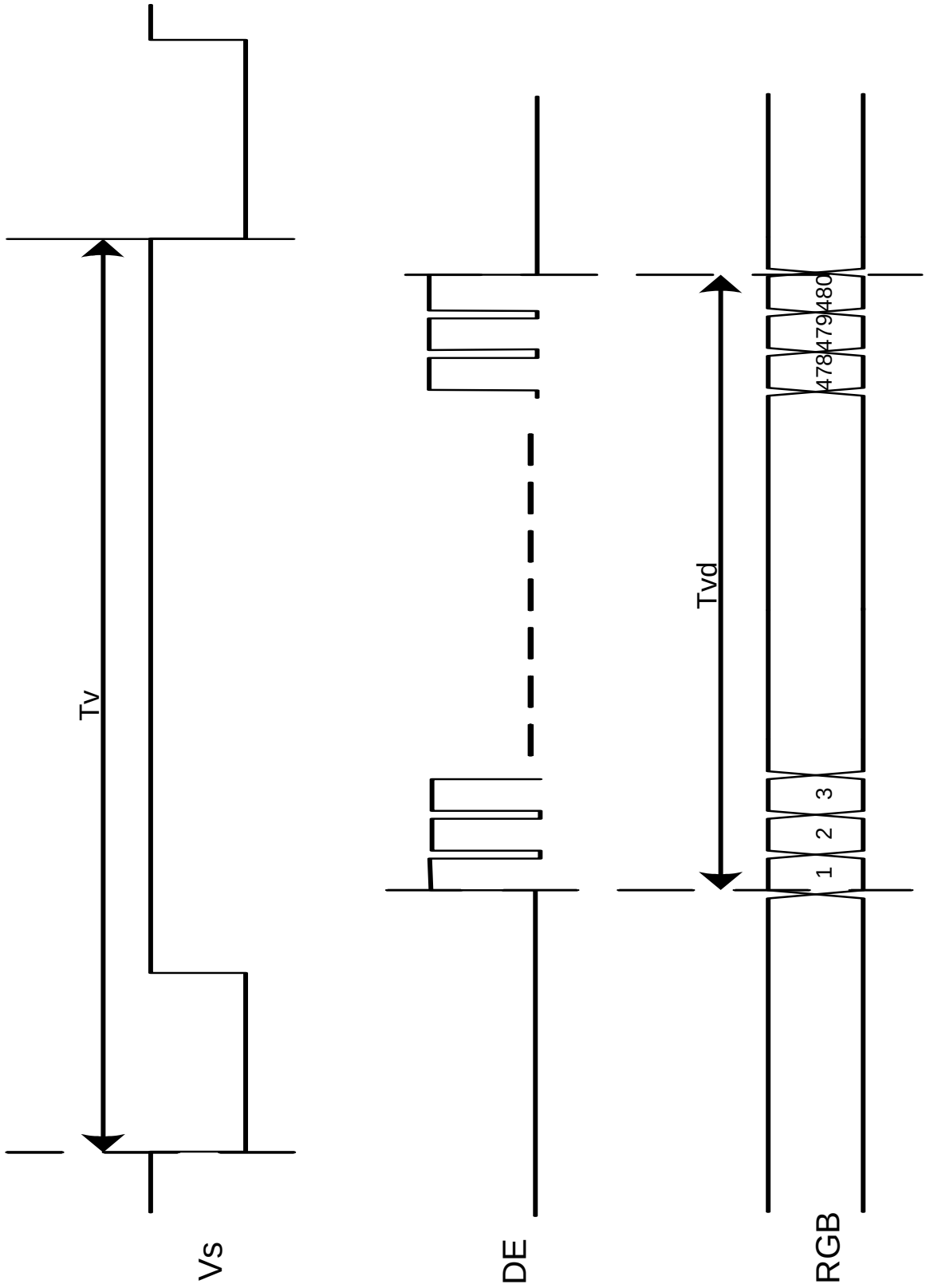

Fig.3-7 Vertical timing

The copyright belongs to InnoLux. Any unauthorized use is prohibited.

4.Optical Specifications

Item	Symbol	Condition	Values			Unit	Remark
			Min.	Typ.	Max.		
Viewing angle (CR≥10)	θ_L	Φ=180°(9 o'clock)	55	65	-	degree	Note 1
	θ_R	Φ=0°(3 o'clock)	55	65	-		
	θ_T	Φ=90°(12 o'clock)	35	45	-		
	θ_B	Φ=270°(6 o'clock)	55	65	-		
Response time	T_{ON}	Normal θ=Φ=0°	-	15	30	msec	Note 3
	T_{OFF}		-	20	40	msec	Note 3
Contrast ratio	CR		250	300	-	-	Note 4
Color chromaticity	W_X		0.26	0.31	0.36	-	Note 2 Note 5 Note 6
	W_Y		0.28	0.33	0.38	-	
Luminance	L		280	350	-	cd/m^2	Note 6
Luminance uniformity	Y_U		70	75	-	-	Note 7

Test Conditions:
1. V_{CC}=3.3V, I_L=200mA (Backlight current), the ambient temperature is 25℃.
2. The test systems refer to Note 2.

The copyright belongs to InnoLux. Any unauthorized use is prohibited.

Note 1: Definition of viewing angle range

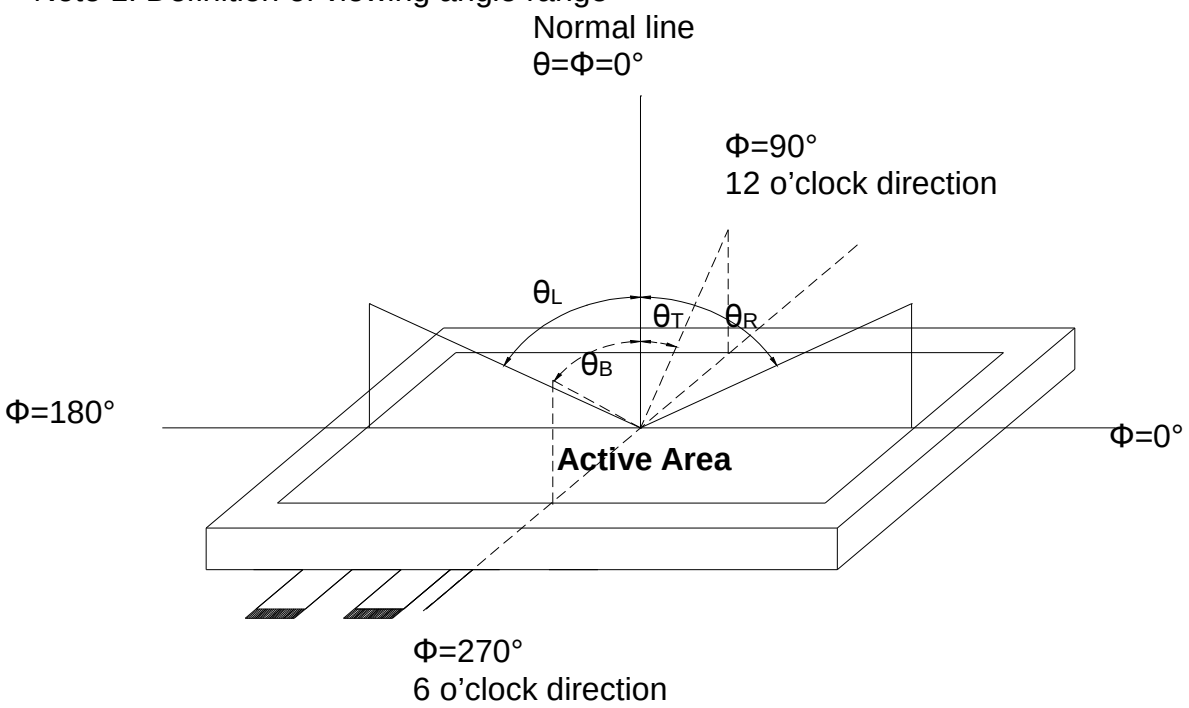

Fig. 4-1 Definition of viewing angle

Note 2: Definition of optical measurement system.

The optical characteristics should be measured in dark room. After 30 minutes operation, the optical properties are measured at the center point of the LCD screen. (Response time is measured by Photo detector TOPCON BM-7, other items are measured by BM-5A/Field of view: 1°/Heig ht: 500mm.)

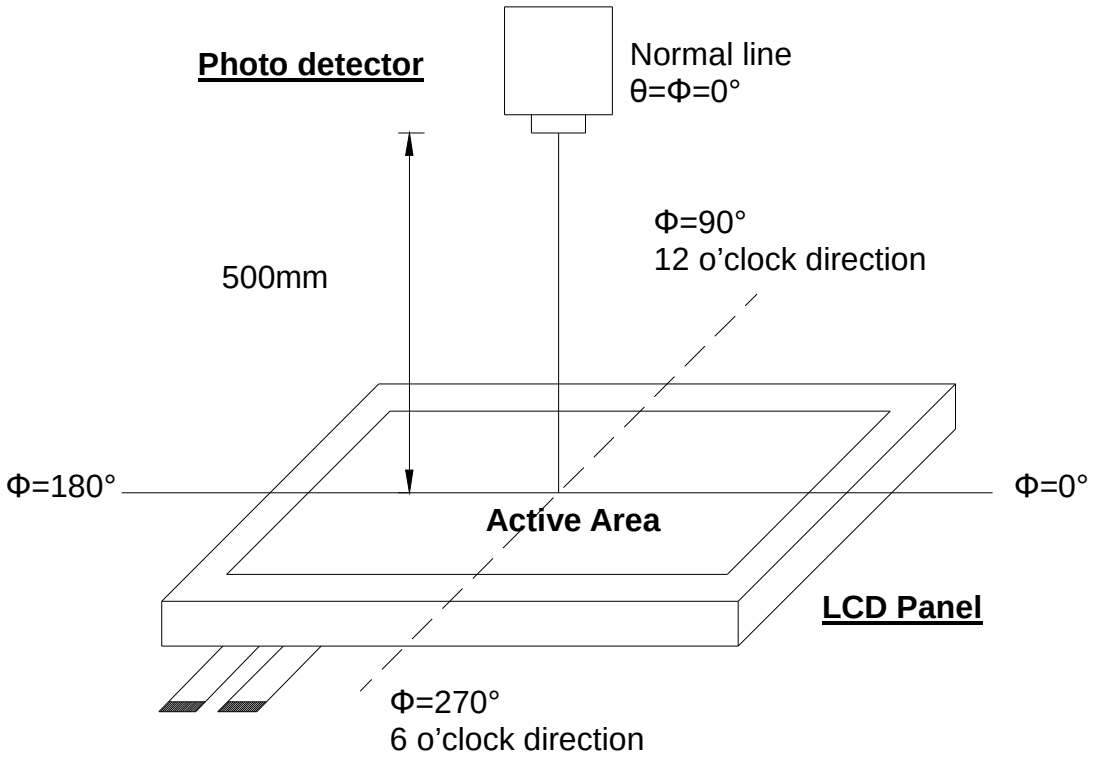

Fig. 4-2 Optical measurement system setup

Note 3: Definition of Response time

The response time is defined as the LCD optical switching time interval between

The copyright belongs to InnoLux. Any unauthorized use is prohibited.

"White" state and "Black" state. Rise time (T_{ON}) is the time between photo detector output intensity changed from 90% to 10%. And fall time (T_{OFF}) is the time between photo detector output intensity changed from 10% to 90%.

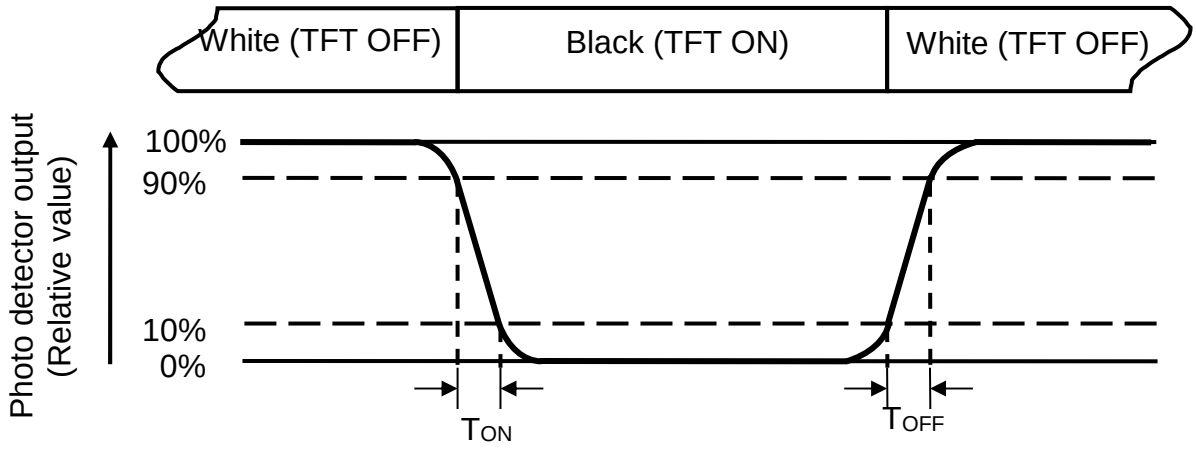

Fig. 4-3 Definition of response time

Note 4: Definition of contrast ratio

$$\text{Contrast ratio (CR)} = \frac{\text{Luminance measured when LCD on the "White" state}}{\text{Luminance measured when LCD on the "Black" state}}$$

Note 5: Definition of color chromaticity (CIE1931)
Color coordinates measured at center point of LCD.

Note 6: All input terminals LCD panel must be ground when measuring the center area of the panel. The LED driving condition is I_L=200mA.

The copyright belongs to InnoLux. Any unauthorized use is prohibited.

Note 7: Definition of Luminance Uniformity

Active area is divided into 9 measuring areas (Refer to Fig. 4-4).Every measuring point is placed at the center of each measuring area.

$$Luminance\ \ Uniformity\ (Yu) = \frac{B_{min}}{B_{max}}$$

L-------Active area length W----- Active area width

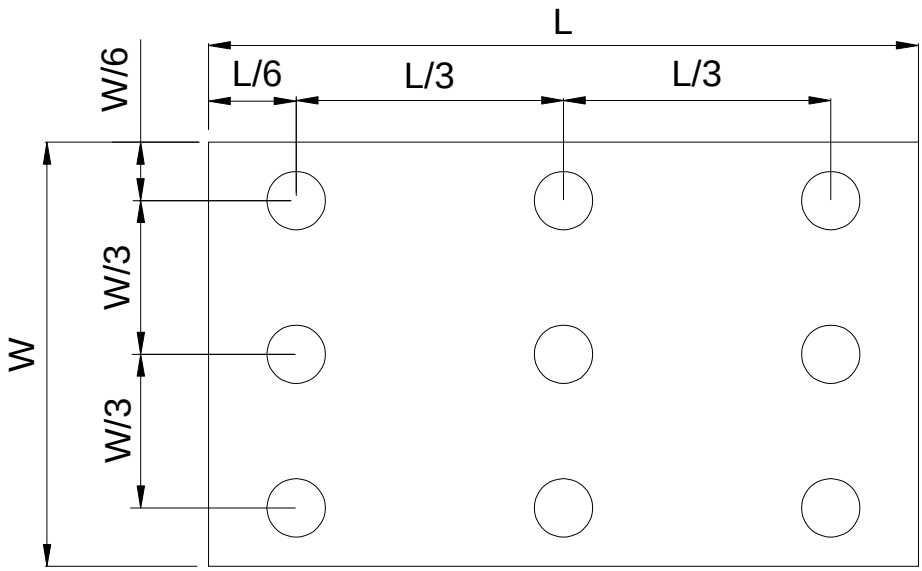

Fig. 4-4 Definition of measuring points

B_{max}: The measured maximum luminance of all measurement position.
B_{min}: The measured minimum luminance of all measurement position.

The copyright belongs to InnoLux. Any unauthorized use is prohibited.

5.Reliability Test Items

(Note3)

Item	Test Conditions	Remark
High Temperature Storage	Ta = 85℃ 240 hrs	Note 1, Note 3,Note 4
Low Temperature Storage	Ta = -30℃ 240hrs	Note 1,Note 4
High Temperature Operation	Ts = 85℃ 240hrs	Note 2, Note 3,Note 4
Low Temperature Operation	Ta = -30℃ 240hrs	Note 1,Note 4
Operate at High Temperature and Humidity	+60℃, 90%RH 240 hrs	Note 3,Note 4
Thermal Shock	-30℃/30 min ~ +85℃/30 min for a total 100 cycles, Start with cold temperature and end with high temperature	Note 3,Note 4
Vibration Test	Frequency range:10~55Hz Stroke:1.5mm Sweep:10Hz~55Hz~10Hz 2 hours for each direction of X. Y. Z. (6 hours for total)	
Mechanical Shock	100G 6ms,±X, ±Y, ±Z 3 times for each direction	
Package Vibration Test	Random Vibration : 0.015G*G/Hz from 5-200HZ, -6dB/Octave from 200-500HZ 2 hours for each direction of X. Y. Z. (6 hours for total)	
Package Drop Test	Height:60 cm 1 corner, 3 edges, 6 surfaces	
Electro Static Discharge	± 2KV, Human Body Mode, 100pF/1500Ω	

Note 1: Ta is the ambient temperature of samples.
Note 2: Ts is the temperature of panel's surface.
Note 3: In the standard condition, there shall be no practical problem that may affect the display function. After the reliability test, the product only guarantees operation, but doesn't guarantee all the cosmetic specification.
Note 4: Before cosmetic and function tests, the product must have enough recovery time, at least 2 hours at room temperature.

The copyright belongs to InnoLux. Any unauthorized use is prohibited.

6. General Precautions

6.1 Safety

Liquid crystal is poisonous. Do not put it in your mouth. If liquid crystal touches your skin or clothes, wash it off immediately by using soap and water.

6.2 Handling

1. The LCD panel is plate glass. Do not subject the panel to mechanical shock or to excessive force on its surface.
2. The polarizer attached to the display is easily damaged. Please handle it carefully to avoid scratch or other damages.
3. To avoid contamination on the display surface, do not touch the module surface with bare hands.
4. Keep a space so that the LCD panels do not touch other components.
5. Put cover board such as acrylic board on the surface of LCD panel to protect panel from damages.
6. Transparent electrodes may be disconnected if you use the LCD panel under environmental conditions where the condensation of dew occurs.
7. Do not leave module in direct sunlight to avoid malfunction of the ICs.

6.3 Static Electricity

1. Be sure to ground module before turning on power or operating module.
2. Do not apply voltage which exceeds the absolute maximum rating value.

6.4 Storage

1. Store the module in a dark room where must keep at +25±10℃ and 65%RH or less.
2. Do not store the module in surroundings containing organic solvent or corrosive gas.
3. Store the module in an anti-electrostatic container or bag.

6.5 Cleaning

1. Do not wipe the polarizer with dry cloth. It might cause scratch.
2. Only use a soft sloth with IPA to wipe the polarizer, other chemicals might permanent damage to the polarizer.

The copyright belongs to InnoLux. Any unauthorized use is prohibited.

7 Mechanical Drawing

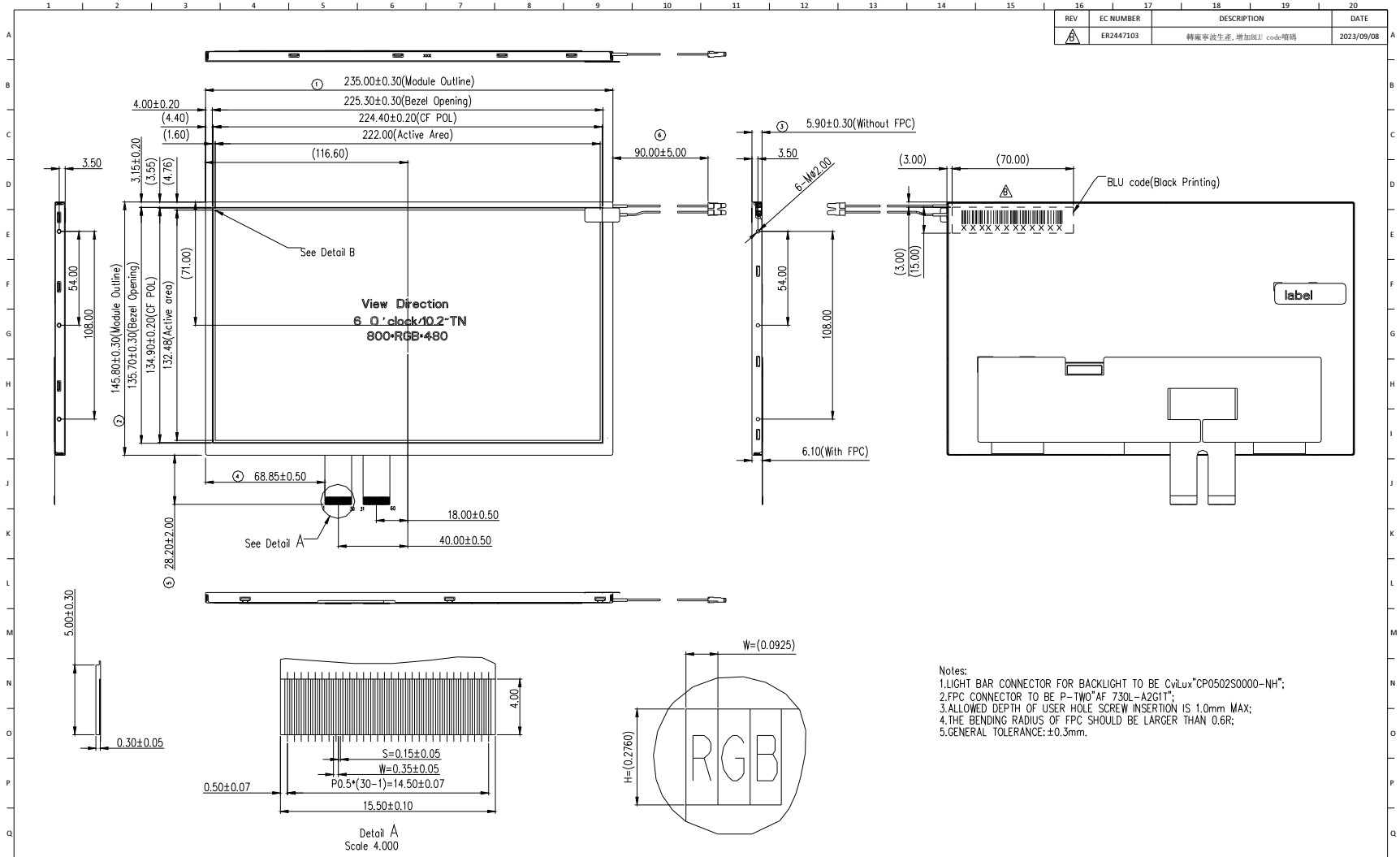

REV	EC NUMBER	DESCRIPTION	DATE
B	ER2447103	轉廠事波生產,增加BLU code噴碼	2023/09/08

Notes:
1.LIGHT BAR CONNECTOR FOR BACKLIGHT TO BE CviLux"CP0502S0000-NH";
2.FPC CONNECTOR TO BE P-TWO"AF 730L-A2G1T";
3.ALLOWED DEPTH OF USER HOLE SCREW INSERTION IS 1.0mm MAX;
4.THE BENDING RADIUS OF FPC SHOULD BE LARGER THAN 0.6R;
5.GENERAL TOLERANCE: ±0.3mm.

LEVEL / DIMENSION	GENERAL LINEAR TOLERANCE 1	2	3	SELECT LEVEL
0 ~ 4	0.05	0.1	0.2	2
4 ~ 14	0.1	0.2	0.3	
14 ~ 63	0.1	0.2	0.4	
63 ~ 250	0.2	0.4	0.6	
250 ~ 600		0.6	1.0	
600 ~ 4000			1.6	

GENERAL ANGULAR TOLERANCE	1	2	3	SELECT LEVEL
LEVEL	1	2	3	2
RANGE	1°	2°	3°	

APPROVED	Cc01 Chen	DATE 2023/09/08	SCALE 1:2
CHECKED	Yang.Y.Yu	UNIT mm	
DESIGNED	Poborsky.Hu		

CONTROL DIMENSION

PART NUMBER or PDM NUMBER: GZ1020NA0025S
DRAWING REV: B
PART DESCRIPTION: LCM AT102TN03 V.8(NGB)
SHEET NUMBER: 1of1
SIZE: A3

INNOLUX

Green Product Category	
Green 4	Halogen Free
	See 13QM000020
Safety	See 13QM000092

The copyright belongs to InnoLux. Any unauthorized use is prohibited.

8 Package Drawing

8.1 Packaging Material Table

No	Item	Model (Material)	Dimensions (mm)	Unit Weight (kg)	Quantity	Remark
1	LCM module	AT102TN03 V.8	235 × 145.8 × 6.1	0.309	25pcs	
2	Partition	BC Corrugated paper	512 × 349 × 226	1.963	1 set	
4	Dust-Proof Bag	aluminum foil	274 X 250 X 0.07	0.0118	25 pcs	
5	Drier	Montmorillonite	85x47x10	0.011	2 pcs	
6	Carton	Corrugated paper	530 X 367 X 260	0.95	1 pcs	
7	Total weight	11.06 ± 5%				

8.2 Packaging Quantity

Total LCM quantity in Carton: no. of Partition (1 Rows x quantity per Row 25) = 25

The copyright belongs to InnoLux. Any unauthorized use is prohibited.

8.3 Packaging Drawing

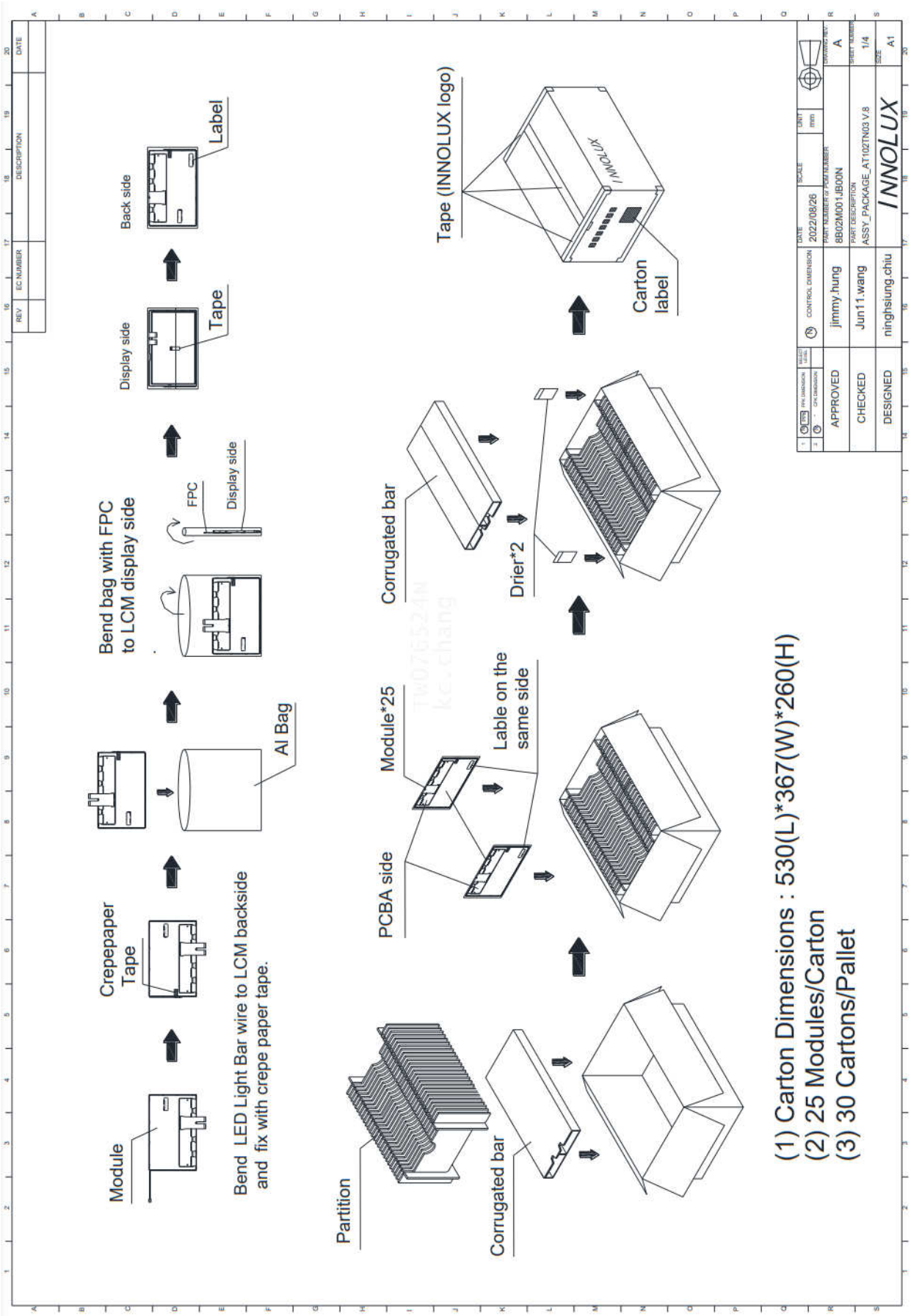

The copyright belongs to InnoLux. Any unauthorized use is prohibited.